料号 Materia No	类别 Category	材质 The material		数量/pcs The number of pcs
C3004WR-2*5P	Wafer	胶壳 Base	Nylon 66 UL 94V-0 (Black)	1000pcs/栋
		PIN针 Copper Needle	Brass tin Plating	

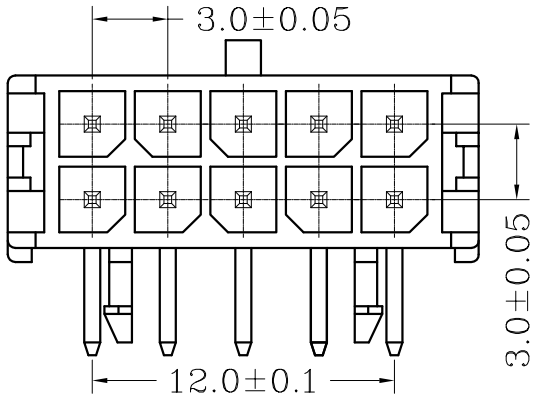

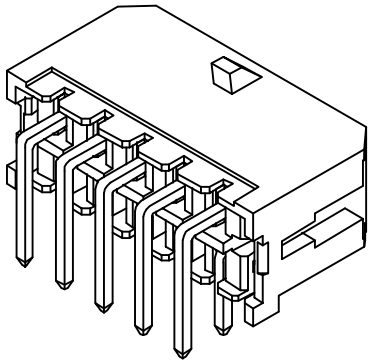

Poles	Part NO.		Dimensions mm	
			A	B
2	C3004WR-2X1P	MX3.0-2X1WR	--	6.65
4	C3004WR-2X2P	MX3.0-2X2WR	3.00	9.65
6	C3004WR-2X3P	MX3.0-2X3WR	6.00	12.65
8	C3004WR-2X4P	MX3.0-2X4WR	9.00	15.65
10	C3004WR-2X5P	MX3.0-2X5WR	12.00	18.65
12	C3004WR-2X6P	MX3.0-2X6WR	15.00	21.65
14	C3004WR-2X7P	MX3.0-2X7WR	18.00	24.65
16	C3004WR-2X8P	MX3.0-2X8WR	21.00	27.65
18	C3004WR-2X9P	MX3.0-2X9WR	24.00	30.65
20	C3004WR-2X10P	MX3.0-2X10WR	27.00	33.65
22	C3004WR-2X11P	MX3.0-2X11WR	30.00	36.65
24	C3004WR-2X12P	MX3.0-2X12WR	33.00	39.65

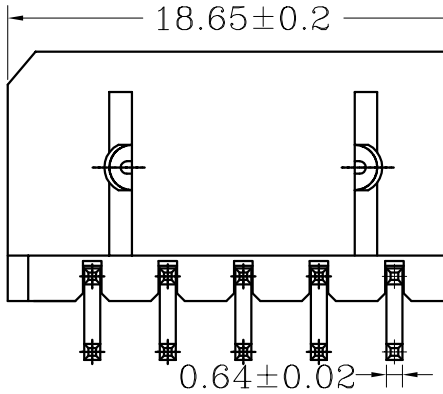

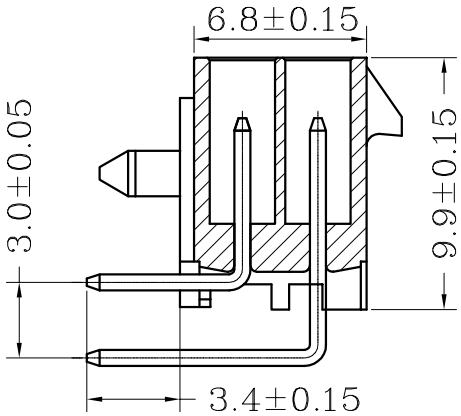

■规格 Specifications

◆1、极数 Poles: 1X2P/1X6P to 2X1P/2X12P
◆2、额定电流 Current rating: 5.0A AC,DC
◆3、额定电压 Voltage rating: 250V AC,DC
◆4、温度范围 Temperature range: -25℃ to +85℃
◆5、接触电阻 Contact resistance: ≤15mΩ
◆6、绝缘电阻 Insulation resistance: ≥1000mΩ
◆7、耐电压 Withstand voltage: 1500V AC/minute
◆8、适用线规 Applicable wire: AWG #30 to #20
◆9、适用基板厚度(Applicable PC board thickness): 1.6mm to 2.0mm

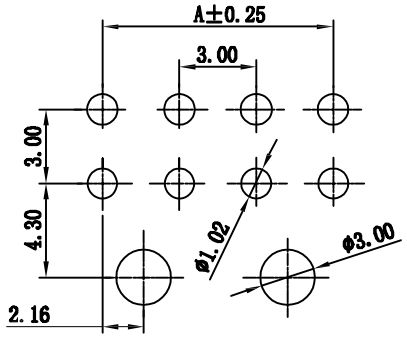

8P~24P P.C.B LAYOUT

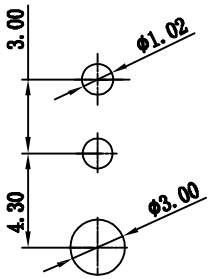

2P P.C.B LAYOUT

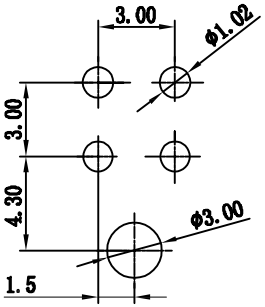

4P~6P P.C.B LAYOUT

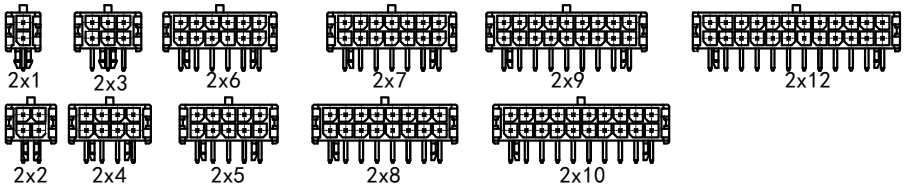

未注公差				HWT 广州市恒炜电子有限公司 GuangZhou HengWei Electronic Co.,Ltd					
>0-3	>3-18	>18-50	>50-120						
±0.12	±0.15	±0.3	±0.5	单位	比例	Design Units	SIZE	页码	
制作	审核	批准		MM Only	——	METRIC	A4		
姚灿瑜	陈小波	王日和		材料	图号			Part No	
				见图解	品名	MX3.0(3004WR)-2×5P			